Tutorial-9

——Synchronous Sequential Logic——

1. Design the sequential circuit for the state diagram in Figure 1, using T flip-flops.

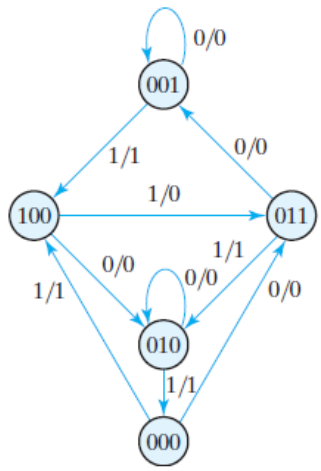

Figure 1: State Diagram for problem 1

2. Sketch the Q output of flip-flop B in Figure 2 in proper relation to the clock. The flip-flops are initially reset.

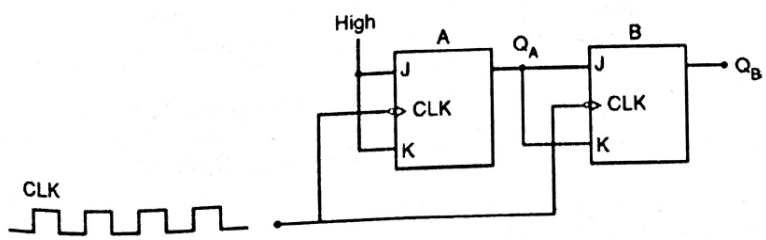

Figure 2: Logic diagram for problem 2, shown two J-K flip-flops

3. The J-K master slave flip-flop in Figure 3 has tied to $+V_{cc}$, and a series of pulses is applied to its CLK input. Describe the waveform at Q.

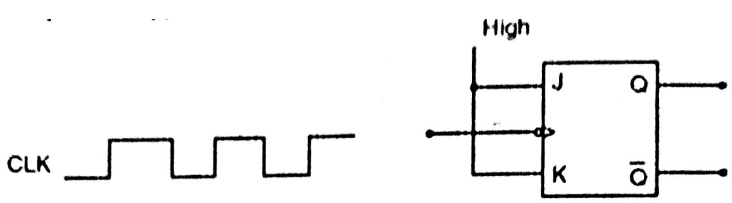

Figure 3: Circuit for problem 3

4. An R-S flip-flop is connected as shown in Figure 4. Determine the Q output in relation to the clock. What specific function does this logic circuit perform?

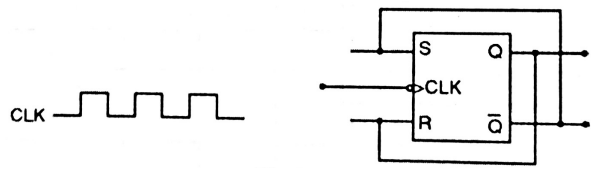

Figure 4: Logic circuit for problem 4

5. For the state diagram shown in Figure 5,
   (a) Draw the corresponding state table.
   (b) Draw the minimized state table.
   (c) Draw the state diagram corresponding to the minimized state table.

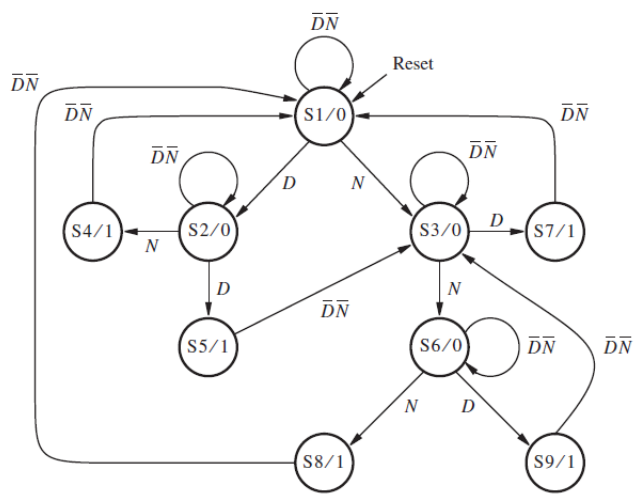

Figure 5: State diagram for problem 5

6. Realize serial adder using Moore and Mealy machines. Serial adder is a digital circuit in which bits are added one pair at a time. The block diagram of serial adder is shown in Figure 6.

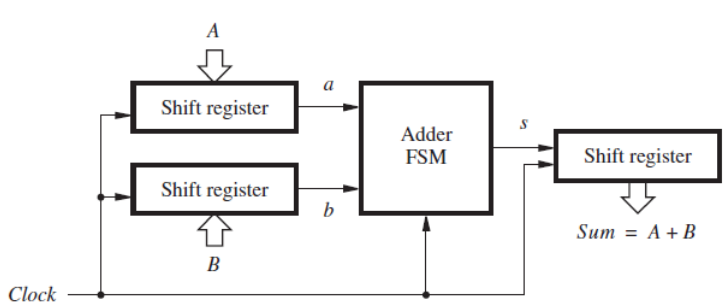

Figure 6: Serial adder